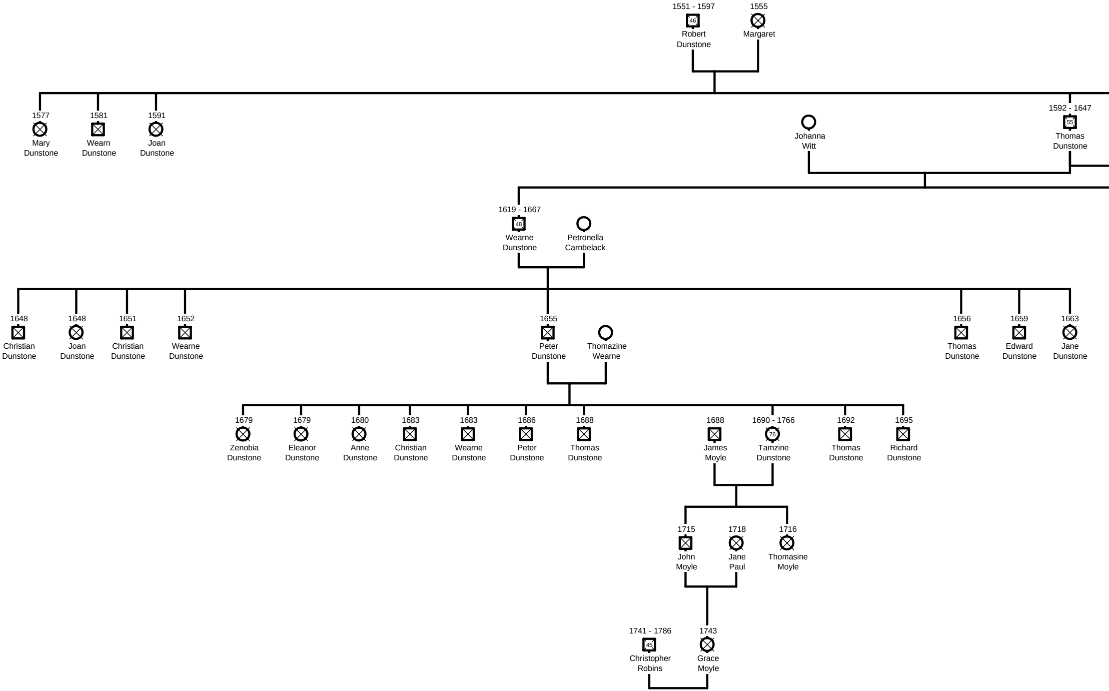
1551 - 1597
46
Robert Dunstone
1555
Margaret
1577
Mary Dunstone
1581
Wearn Dunstone
1591
Joan Dunstone
Johanna Witt
1592 - 1647
55
Thomas Dunstone
1619 - 1667
48
Wearne Dunstone
Petronella Carnbelack
1648
Christian Dunstone
1648
Joan Dunstone
1651
Christian Dunstone
1652
Wearne Dunstone
1655
Peter Dunstone
Thomazine Wearne
1656
Thomas Dunstone
1659
Edward Dunstone
1663
Jane Dunstone
1679
Zenobia Dunstone
1679
Eleanor Dunstone
1680
Anne Dunstone
1683
Christian Dunstone
1683
Wearne Dunstone
1686
Peter Dunstone
1688
Thomas Dunstone
1688
James Moyle
1690 - 1766
76
Tamzine Dunstone
1692
Thomas Dunstone
1695
Richard Dunstone
1715
John Moyle
1718
Jane Paul
1716
Thomasine Moyle
1741 - 1786
45
Christopher Robins
1743
Grace Moyle

DUNSTONES Generations 1 - 7

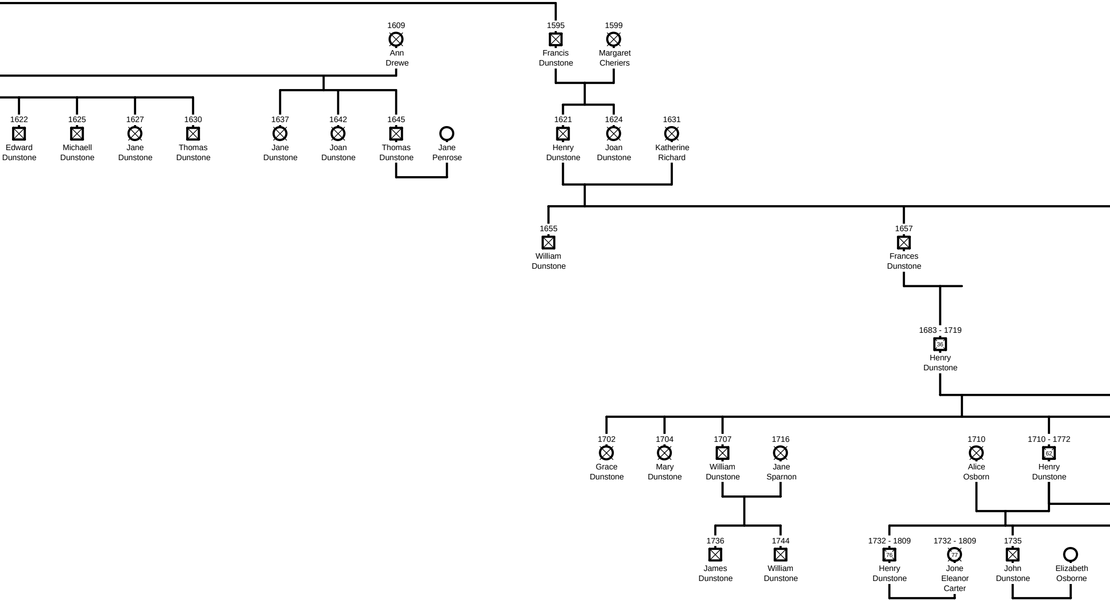
1609
Ann Drewe
1595
Francis Dunstone
1599
Margaret Cheriers
1622
Edward Dunstone
1625
Michaell Dunstone
1627
Jane Dunstone
1630
Thomas Dunstone
1637
Jane Dunstone
1642
Joan Dunstone
1645
Thomas Dunstone
Jane Penrose
1621
Henry Dunstone
1624
Joan Dunstone
1631
Katherine Richard
1655
William Dunstone
1657
Frances Dunstone
1683 - 1719
36
Henry Dunstone
1702
Grace Dunstone
1704
Mary Dunstone
1707
William Dunstone
1716
Jane Sparnon
1710
Alice Osborn
1710 - 1772
62
Henry Dunstone
1736
James Dunstone
1744
William Dunstone
1732 - 1809
76
Henry Dunstone
1732 - 1809
77
Jone Eleanor Carter
1735
John Dunstone
Elizabeth Osborne

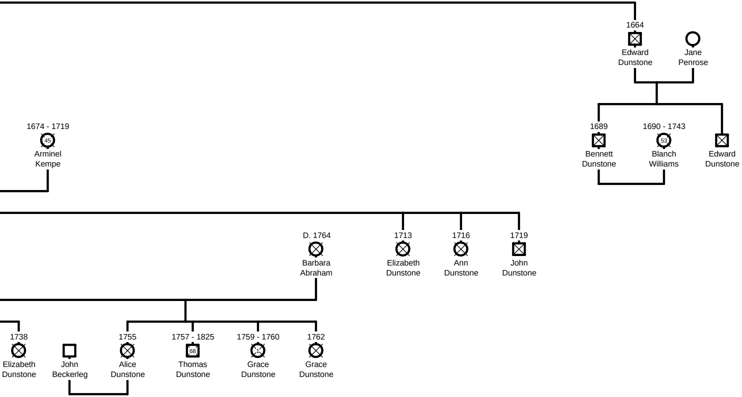
1664
Edward Dunstone
Jane Penrose
1674 - 1719
45
Arminel Kempe
1689
Bennett Dunstone
1690 - 1743
53
Blanch Williams
Edward Dunstone
D. 1764
Barbara Abraham
1713
Elizabeth Dunstone
1716
Ann Dunstone
1719
John Dunstone
1738
Elizabeth Dunstone
John Beckerleg
1755
Alice Dunstone
1757 - 1825
68
Thomas Dunstone
1759 - 1760
1
Grace Dunstone
1762
Grace Dunstone